SHARP®

Plasmacluster™

FU-28H-A

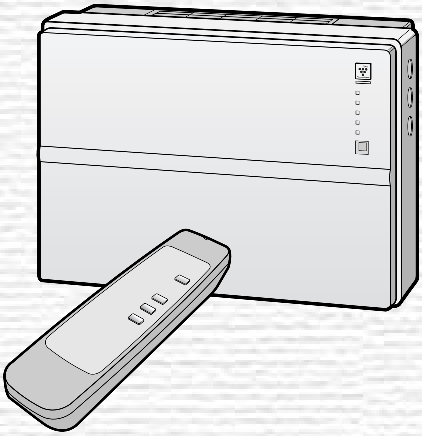

AIR PURIFIER

INSTALLATION MANUAL
OPERATION MANUAL

ENGLISH

空氣清新機

安裝說明書
使用說明書

中文

香港電器安全規格
(國際電工委員會規格適合)

Wall-mounting type

壁掛型

*Plasmacluster is a trademark of Sharp Corporation.

*Plasmacluster是聲寶公司的商標。

ENGLISH

HOW SHARP AIR PURIFIER WORKS

An air purifier draws in room air from its air intake, lets the air pass through an Active Carbon Filter (Deodorizing Filter) and a HEPA Filter (dust collection filter) inside the unit, then discharges the air from its air outlet. The air purifier repeats this process by moving its internal fan.
As air passes through, the HEPA Filter can remove dust particles. The Active Carbon Filter gradually absorbs odour elements as they repeatedly pass through the filter.
(Odour elements are absorbed by HEPA Filter as well.)

Some odour ingredients absorbed by the filters may become separated and may be discharged through the air outlet and result in additional odour. Depending on the usage environment, this odour may become strong in a shorter period than expected. In this case, purchase the optional replacement filter kit FZ-28SEF.

NOTE

The air purifier is designed to remove air-suspended dust and odour, but not harmful gases (for example, carbon monoxide contained in cigarette smoke). Neither can it completely remove odours that are always present (for example, odours from construction materials and pet odours).

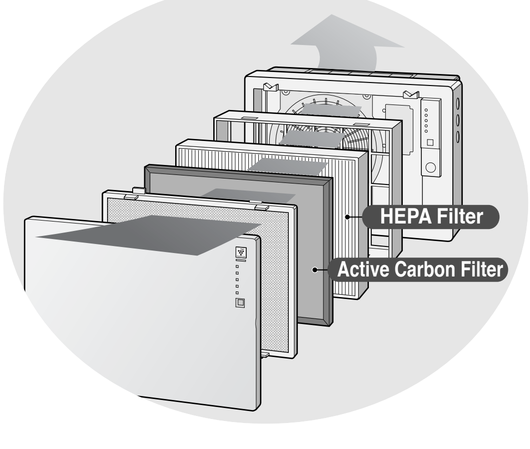

CONTENTS

IMPORTANT SAFETY INSTRUCTIONS E-2
- WARNING E-2
- CAUTIONS CONCERNING OPERATION E-2
- REMOTE CONTROL LIMITATIONS E-3
- CAUTIONS WHEN MOUNTING THIS PRODUCT TO A WALL E-3
- FILTER GUIDELINES E-3

PART NAMES E-4
- MAIN UNIT DISPLAY E-4
- BACK E-4
- ACCESSORIES E-4

PREPARATION E-5
- INSERTING BATTERIES IN THE REMOTE CONTROL E-5
- REMOTE CONTROL USE E-5

INSTALLATION E-6

FILTER INSTALLATION E-10

OPERATION E-12
- MAIN UNIT OPERATION E-12
- REMOTE CONTROL OPERATION E-13

CARE AND MAINTENANCE E-14
- FILTER REPLACEMENT GUIDELINES E-14
- MAIN UNIT E-15
- ODOUR SENSOR E-15
- PRE-FILTER E-15

SPECIFICATIONS E-15

TROUBLE SHOOTING E-16

Thank you for purchasing the SHARP FU-28H-A. Please read this manual carefully for the correct usage information. Before using this product, be sure to read the section: "Important Safety Instructions."
After reading this manual, retain it in a convenient location for future reference.

IMPORTANT SAFETY INSTRUCTIONS

When using electrical appliances, <u>basic safety precautions</u> should be followed, including the following:

WARNING - To reduce the risk of electrical shock, fire or injury to persons:

- Read all instructions before using the air purifier.
- Use only a 220 volt outlet .
- **Do not use the air purifier if the power cord or plug is damaged or the connection to the wall outlet is loose.**
- Periodically remove dust from the power plug.
- **Do not insert fingers or foreign objects into the intake or air outlet.**

  When removing the power plug, always hold the plug and never pull the cord.

  Electrical shock and/or fire from short circuit may occur as result.
- **Do not use this air purifier near gas appliances or fireplaces.**
- **Remove the power plug from the wall outlet before cleaning the unit and when not using the unit.**

  Electrical shock from bad insulation and / or fire from short circuit may occur as a result.
- **If the power cord is damaged, it must be replaced by the manufacturer, its service agent, Sharp authorized service or similarly qualified person in order to avoid a hazard.**
- Do not operate when using aerosol insecticides or in rooms where there is oily residue, incense, sparks from lit cigarettes, chemical fumes in the air or a humidity condition.
- Use care when cleaning the air purifier. Strong corrosive cleansers may damage the exterior.
- Only Sharp Authorized Servicers should service this air purifier. Contact the nearest Servicer for any problems, adjustments, or repairs.
- The batteries must be removed from the remote control before disposal, and the batteries must be disposed safely.

CAUTIONS CONCERNING OPERATION

- Do not block the intake and air outlet.
- Do not use the unit near or on hot objects, such as range or where it may come into contact with steam.
- **Always hold the main unit when moving it.**

  Holding the front panel when carrying may cause it to detach, thus dropping the unit and resulting in bodily injury.
- **Do not operate the unit without the filter.**
- **Do not wash the Active Carbon Filter and the HEPA Filter.**

  Not only it does not improve filter performance, it may cause electric shock or malfunction.
- **Clean the exterior with a soft cloth only.**

  The unit surface may be damaged or cracked.

  In addition, the sensor may malfunction as a result.

REMOTE CONTROL LIMITATIONS

DO NOT USE THE REMOTE CONTROL IN THE FOLLOWING LOCATIONS:

- **Any location where there is inverter lighting equipment or electronic spontaneous lighting equipment**

  The remote control may become inoperative. In this case, move away from such lighting equipment or change direction.
- **Location exposed to direct sunlight or fluorescent.**

  The unit may not receive signals from the remote control.

CAUTIONS WHEN MOUNTING THIS PRODUCT ON A WALL

- **Avoid a location where the sensor is exposed to direct wind.**

  The unit may not operate properly.
- **Avoid a location where curtains, etc., come into contact with the intake or air outlet.**

  Curtains, etc., may become dirty or a malfunction may occur.
- **Avoid locations where the unit is exposed to condensation, due to drastic temperature changes.**
- **Place on a stable surface with sufficient air circulation.**
- **Install the unit on a wall, wooden pillar, crosspiece, etc. that is flat and strong enough.**
- **Do not install the unit on a thin wall or on plasterboard. The unit may fall down if installed on an insufficiently strong wall.**
- **To install the unit on a wooden wall that is less than 10 mm thick, consult your dealer and have them confirm the strength of the wall before installation.**
- **Always hold the main unit when moving it.**

  Holding the front panel may cause it to become detached, thus dropping the unit and resulting in bodily injury.
- **Do not install when there is generation of lampblack, such as in a kitchen, etc.**

  The unit surface may crack or the sensor may malfunction as a result.

FILTER GUIDELINES

- Follow the instructions in this manual for correct care and maintenance of the filters.

ENGLISH

PART NAMES

MAIN UNIT DISPLAY

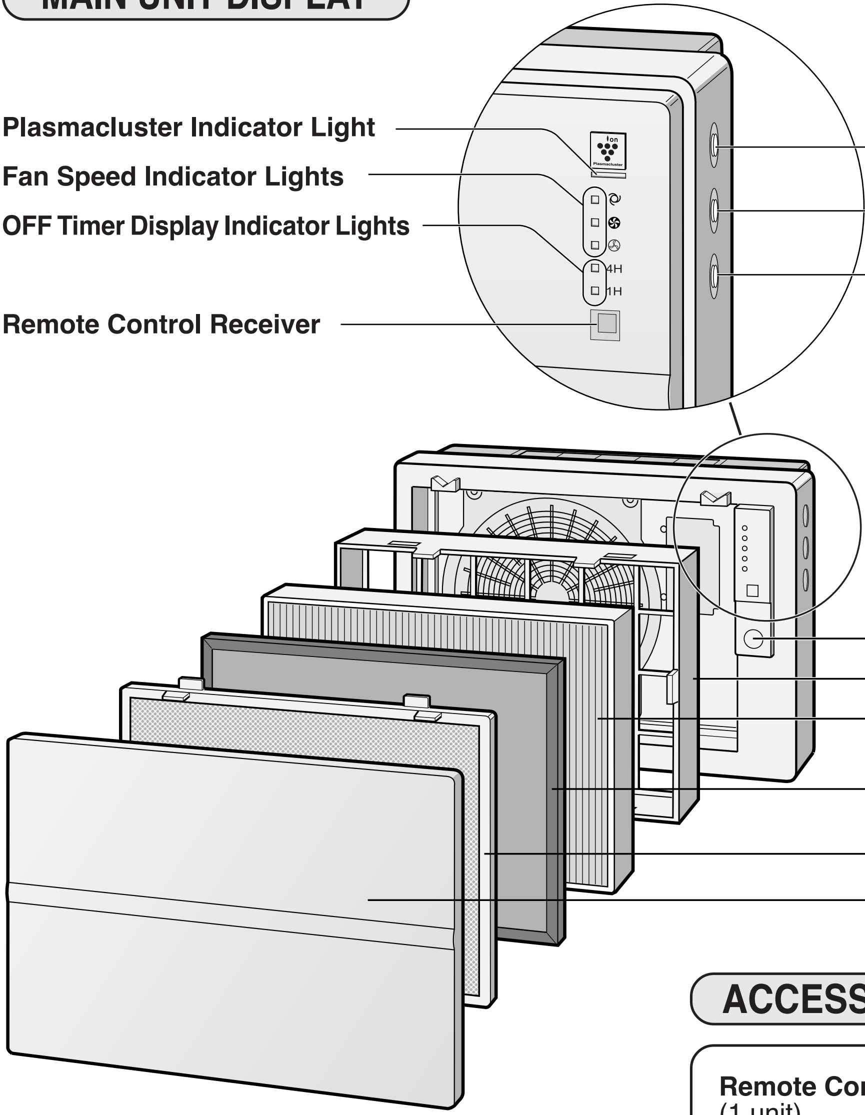

BACK

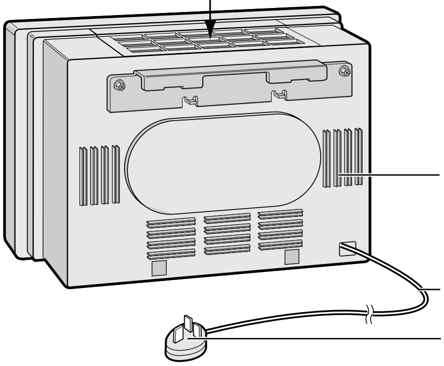

ACCESSORIES

Remote Control
(1 unit)

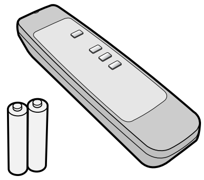

Battery
(AA battery x 2)

Operation Manual

Wall mounting kit

- **Wall mounting bracket**

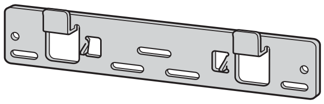

- **Wood screws** (4 pcs)
- **Fisher plugs** (4 pcs)

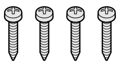

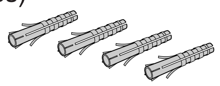

PREPARATION

INSERTING BATTERIES IN THE REMOTE CONTROL

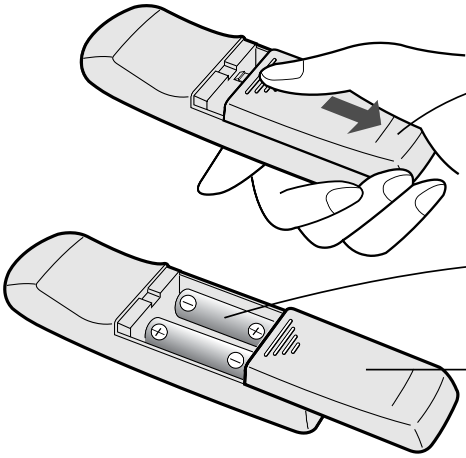

1 Remove the back cover
Press and slide the back cover to remove.

2 Insert batteries
Insert batteries with ⊕ and ⊖ as shown below.

3 Close the back cover

About the batteries

- The battery life is about 1 year.
- Replace the batteries when the remote control becomes inoperative.
- Incorrect usage of the batteries may cause battery fluid leakage and/or damage. Take care of the following when handling:
  - When replacing the batteries, replace both batteries with new ones of the same type. (Use 2 AA manganese batteries .)
  - When not using the unit or remote control for an extended period, remove the batteries. This prevents malfunction of the remote control from battery fluid leakage.
  - The batteries of the accessory are for initial use only and may be depleted within 1 year.

REMOTE CONTROL USE

- Operate the remote control facing the main unit receiver.
- The signal range is about 7m (front).
- Make sure there are no objects blocking the path of the signal.
- A beep sound will be heard from the main unit when a signal is received.

NOTE

- Avoid dropping or damaging the remote control, using in a high humidity condition, in direct sun-light or near a heat source.

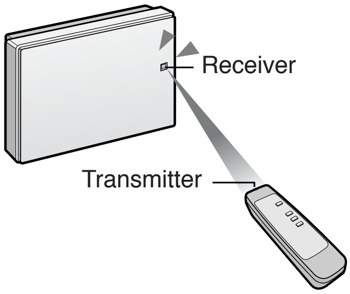

FOR APPROPRIATE INSTALLATION

Free Standing Installation.
In case you prefer free standing installation, optional stand FZ-FC1TS is available.

To remove room odour

Installing the unit high up on the wall is most effective.

To remove room dust

Comparatively large dust particles such as pollen and house dust collect in the lower strata of the room air.

Select a location in the room where the air circulation is good.

This improves the cleaning performance and causes Plasmacluster ions to spread throughout the room.

Operating Conditions

Please operate the unit under the following conditions.

It is recommended to use the unit in a room where the temperature is in the range of 0 - 35C°.
Avoid locations where the unit is exposed to condensation, due to drastic temperature changes.

1 Determine the mounting location

Leave space around the bracket referring to the drawing below. The unit cannot be mounted if there is insufficient spacing around the bracket.

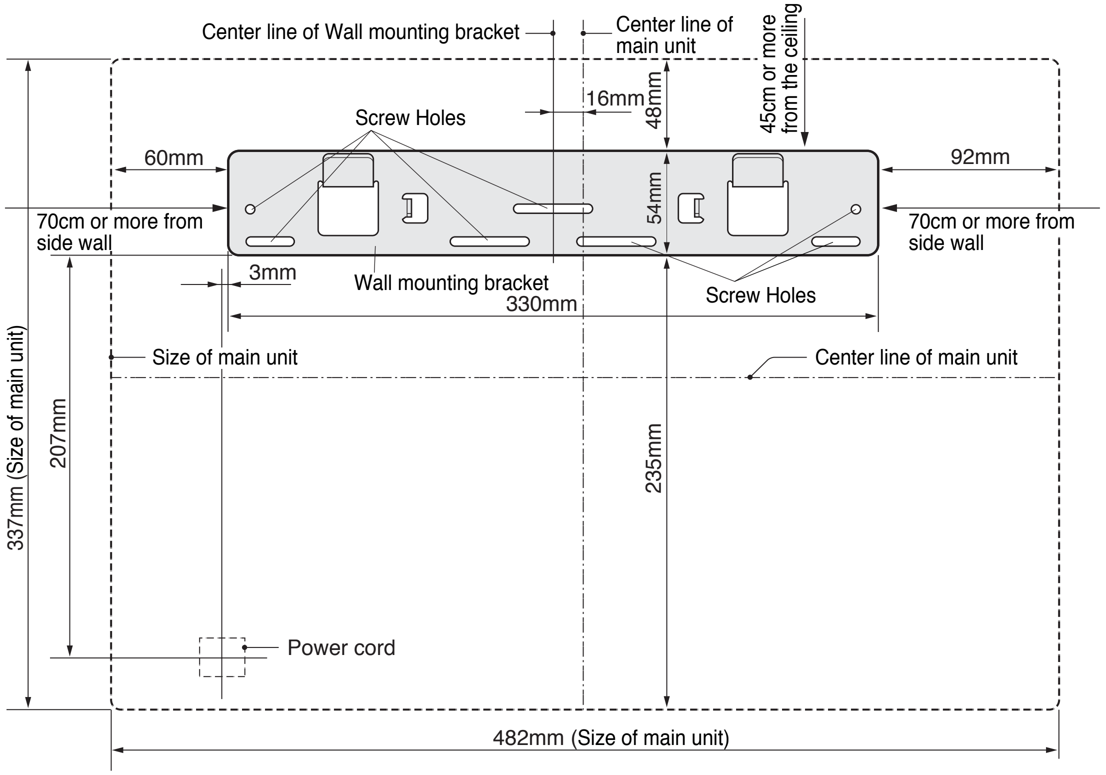

Installation Cautions

- Before fixing the wall mounting bracket, make sure there is nothing that could obstruct installation of the unit. Then fix the wall mounting bracket through screw holes with the supplied wood screws.
- Install the unit on a wall, wooden pillar, crosspiece or the like that is flat and strong enough..
- If the wall is weak or made of concrete, have the unit installed by a specialist such as an electric appliance store.
- Avoid locations near inverter lamps or where the unit is exposed to direct sunlight.

2 Mount wall mounting bracket

• Mount the bracket using the included wood screws so that it is mounted in horizontal balanced level.

● Installation on a concrete, block or mortar surface

Drill holes of at least 35 mm depth and 5 mm diameter into the wall, drive in fisher plugs, and fix the unit with wood screws.

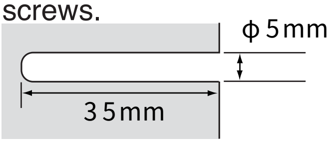

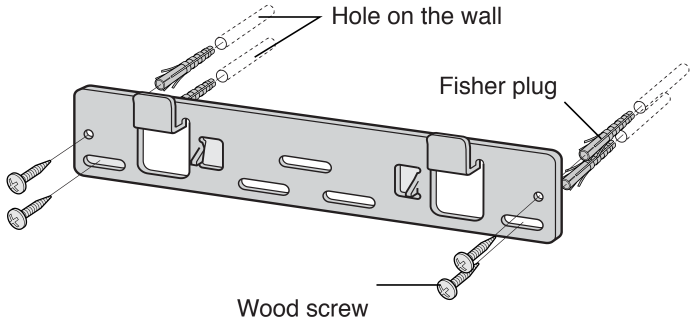

● Installation on a wooden pillar, crosspiece or other wooden surface

Use wood screws for installation.

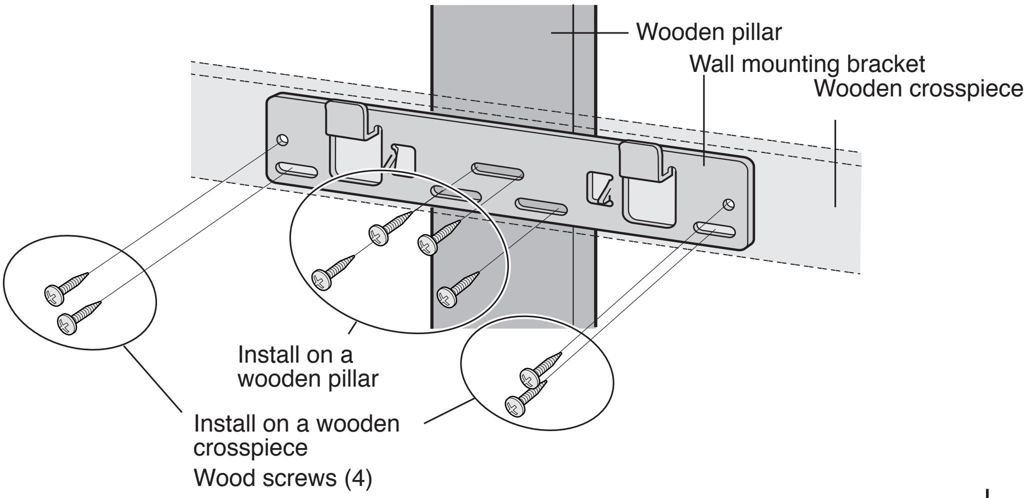

Caution

- To install the unit on a wooden wall that is less than 10 mm thick, consult your dealer and have them confirm the strength of the wall before installation.
- Install the unit on a wall, wooden pillar, crosspiece, etc. that is flat and strong enough.
- Make sure that the unit is installed in an upright position, without leaning to the right or left.

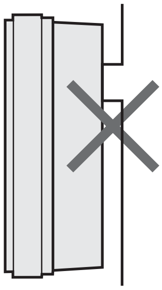

Before starting the wall installation, be sure to remove the front panel and filter frame.

3 Install the unit on the wall.

1 Place the unit facing up, remove the Front Panel and Filter Frame.

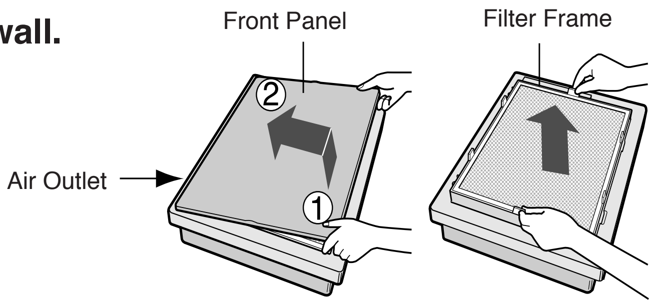

2 Adjust the length of the power cord.

1. Measure the distance between the unit and the wall outlet. (Refer to E-6)
2. Place the unit face down, and insert the power cord into the power cord adjusting guide so as to adjust it to the measured length.

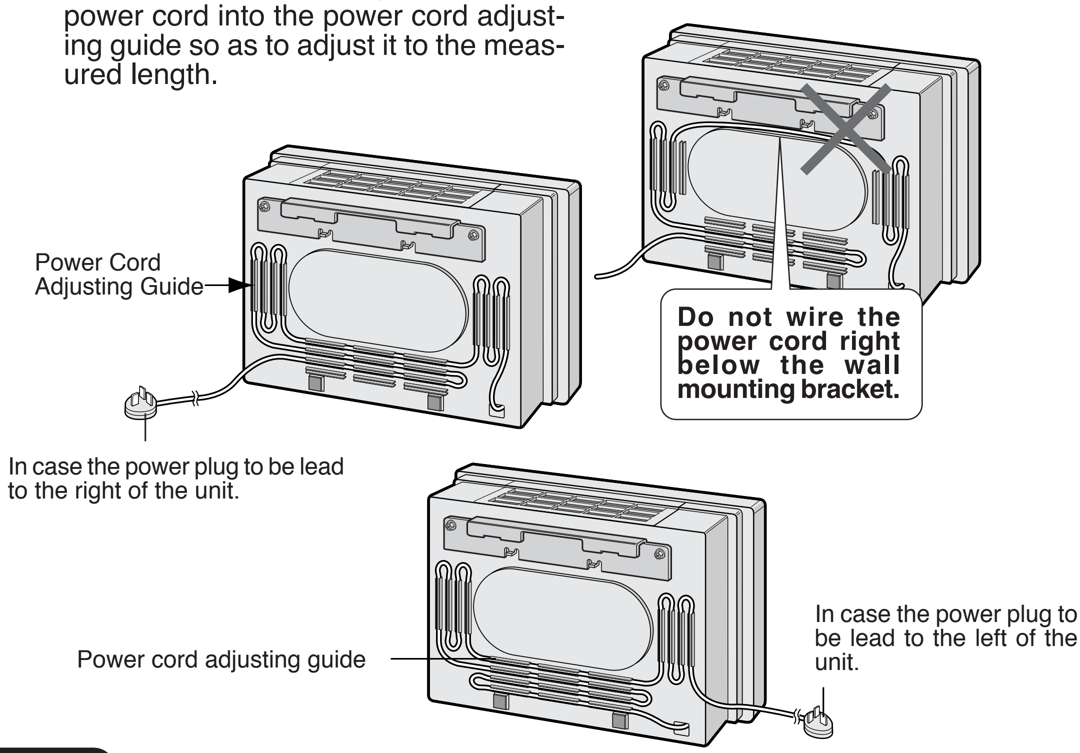

Cautions

- To avoid scratching or damaging the unit, place it on a soft piece of cloth until it is installed on the wall.
- Do not lead the power cord together with other cord and do not twist it.
- Never modify the power cord.
- Take care not to damage the power cord.

3 Apply a mark (tape, etc.) 8 cm above both ends of the wall mounting bracket.

4 Lift up the unit so that the hooking holes on the unit are aligned with the marks, hook the unit onto the wall mounting bracket and slide it to the right.

When positioned correctly, the unit will move down slightly until it engages.

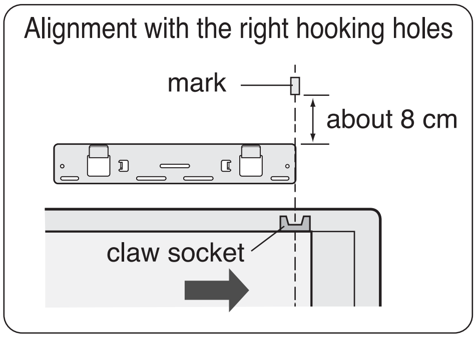

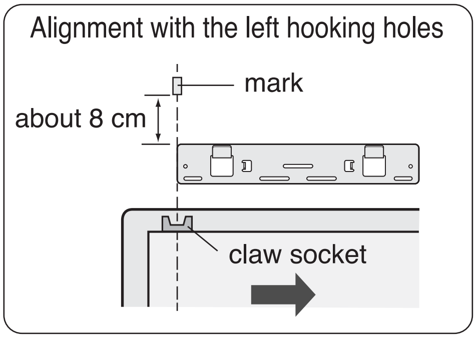

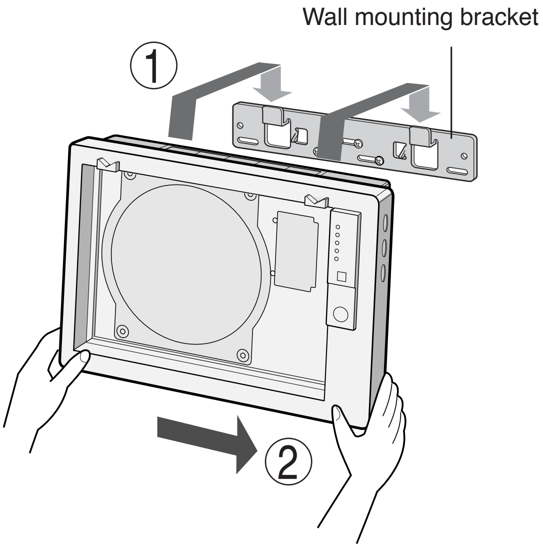

5 Double-check the installation.

Make sure that the claws of the unit are hooked in properly. If they are not, the unit will move sideways. In addition, the unit may fall off the wall and be damaged.

- Make sure that the power cord is not caught in the unit.

6 Remove the mark.

HOW TO REMOVE THE UNIT

Pull the power plug out of the wall outlet and remove the Front Panel and Filter Frame. Holding the unit by its lower corners, lift it up slightly, then slide it to the right or left and lift it off toward the top.

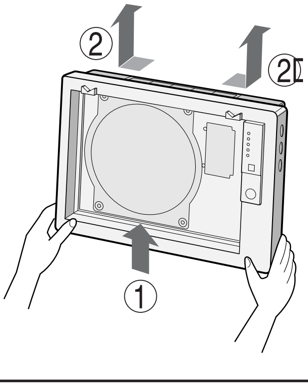

FILTER INSTALLATION

Be sure to remove the filters from the plastic bags before using the unit.

1 **Remove the Pre-Filter, Active Carbon Filter and HEPA Filter from the Filter Frame.**

How to Remove the Stainless Steel Pre-Filter

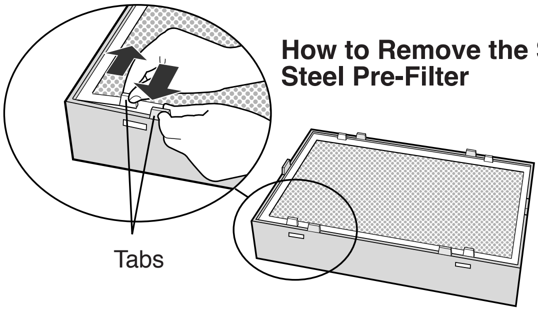

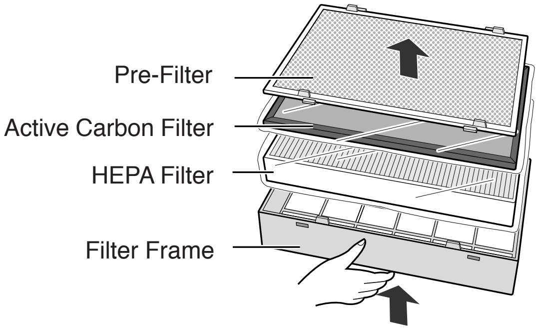

2 **Remove the Active Carbon Filter and HEPA Filter from the plastic bags.**

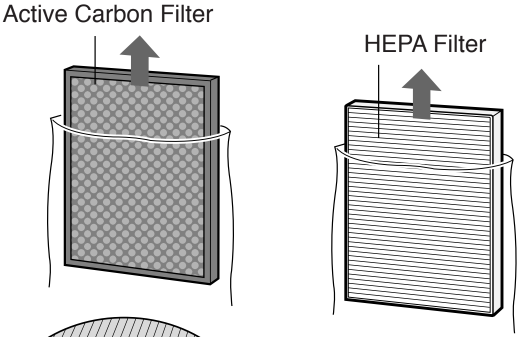

3 **Place the HEPA Filter within the Filter Frame.**

Do not install the filter backwards or the unit will not operate properly.

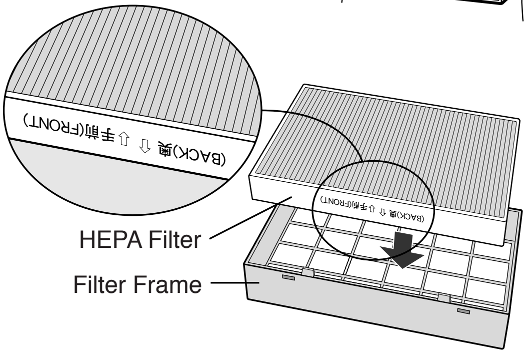

4 **Place the Active Carbon Filter within the Filter Frame on top of the HEPA Filter.**

The Active Carbon Filter does not have a front and a back.

5 **Next, place the Pre-Filter within the Filter Frame.**

Fit the 4 tabs of the Pre-Filter into the holes in the Filter Frame.

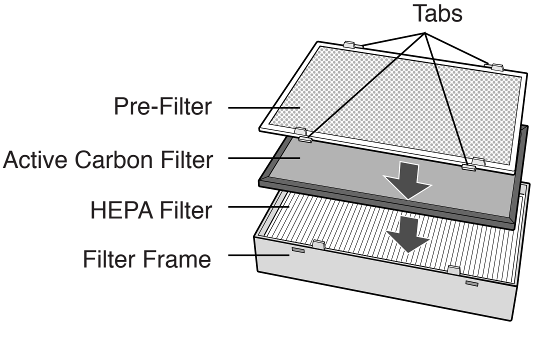

6 **Mount the Filter Frame to the main unit.**

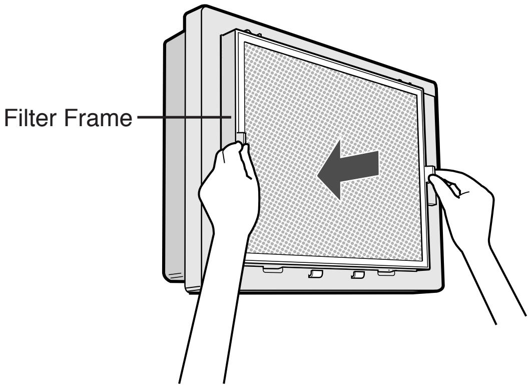

7 **Fill in the usage start date on the Date Label.**

Use the date as a guide for the Filter Replacement schedule.

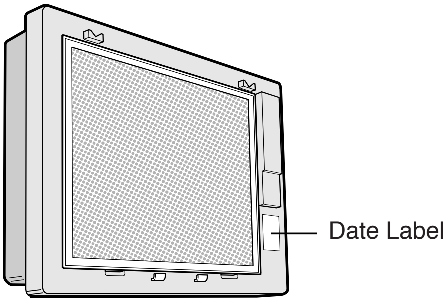

8 **Mount the Front Panel to the main unit.**

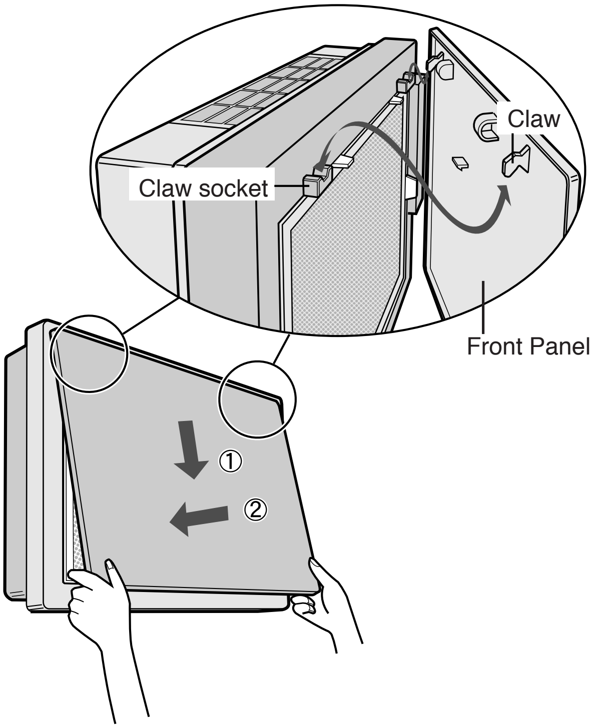

9 **Insert the power plug into the wall outlet and check on/off operation using the remote control.**

OPERATION

For the first 30 seconds after the plug is inserted into the wall outlet, the unit will check the conditions of the air.

- **Auto Operation**
  Odour sensor checks the amount of impurities in the air and the fan speed switches automatically.
- **Manual Operation**
  Regardless of the amount of impurities, desired fan speed can be switched between Silent and Max.

MAIN UNIT OPERATION

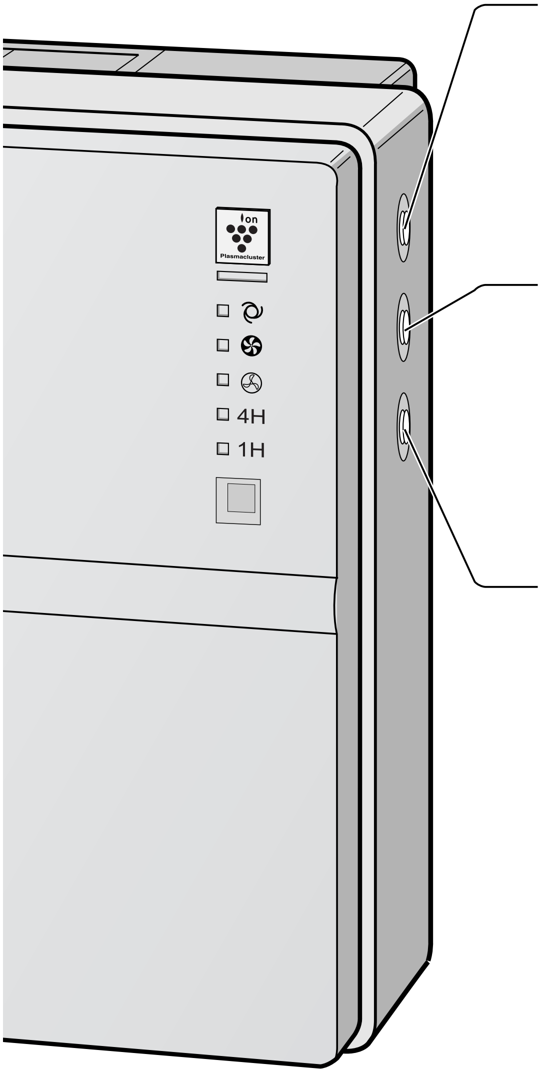

POWER ON/OFF button

- Used to start AUTO operation (short beep) and stop operation (long beep).
- Plasmacluster Indicator Light and Fan Speed Indicator Light (AUTO) turn on/off.
- Unless unplug the power cord, the operation starts in the previous mode the unit was operated in.

Fan Control button

The fan speed can be switched among Silent, Max and AUTO.

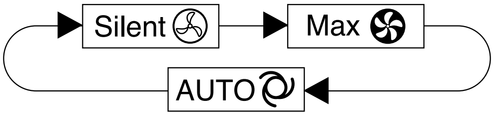

OFF Timer button

- The set timer switches every time the button is pressed as shown below.
- When “4 hours” is selected “4 H” indicator light activates. When the remaining time becomes 1 hour, then indicator light switches to “1 H”.

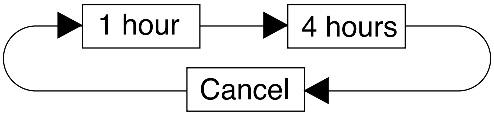

Plasmacluster Ion Operation

While the product is in operation, the unit will constantly discharge approximately the same amount of Positive and Negative cluster ions. This is effective for inactivating airborne mold, viruses, bacteria, allergens and reducing mold odors.

REMOTE CONTROL OPERATION

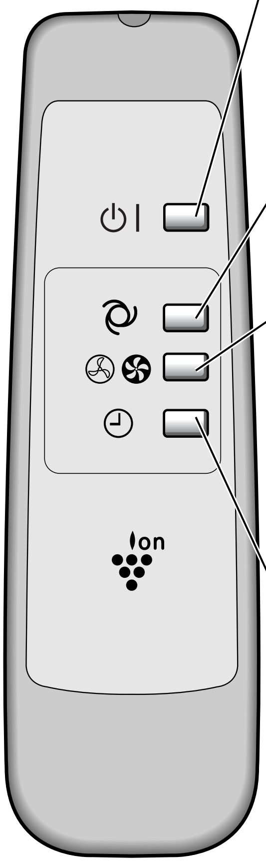

POWER ON/OFF button

- Used to start AUTO operation (short beep) and stop operation (long beep).
- Plasmacluster Indicator Light, and Fan Speed Indicator Light (AUTO) turn on/off.
- Unless unplug the power cord, the operation starts in the previous mode the unit was operated in.

AUTO (Fan Speed) button

The fan speed switches automatically depending on the amount of impurities in the air.

MANUAL (Fan Speed) button

The fan speed can be switched between Silent, Max.

Silent → Max → (back to Silent)

OFF Timer button

- The set timer switches every time the button is pressed as shown below.
- When “4 hours” is selected “4 H” indicator light activates. When the remaining time becomes 1 hour, then indicator light switches to “1 H”.

1 hour → 4 hours → Cancel → (back to 1 hour)

CARE AND MAINTENANCE

To maintain optimum performance of this air purifier, please clean the unit including the sensor and filters periodically.
When cleaning the unit, be sure to unplug the power cord, and never handle the plug with wet hands. Electrical shock and/or bodily injury may occur as a result.

FILTER REPLACEMENT GUIDELINES

Depending on the usage environment, air outlet odour may become strong after several months.
If dust or odours cannot be removed easily, replace the filters.
(Refer to HOW SHARP AIR PURIFIER WORKS E-1)

Guide for filter replacement timing

- The following filter life and replacement period is based on the condition of smoking 10 cigarettes per day, reducing the dust collection/deodorization power to half compared with that of new filters.

• HEPA Filter	About 12 months after opening
• Active Carbon Filter	About 12 months after opening

REPLACING THE FILTERS

1 **See page E-10,11 for directions on how to install the filters when replacing.**

2 **Fill in the usage start date of the filters on the Date Label.**

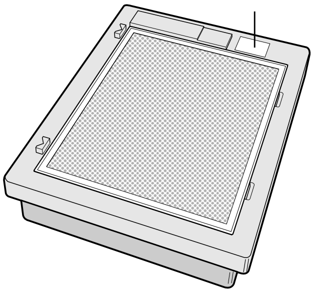

Replacement Filters

Model: FZ-28SEF
- HEPA Filter(with Microbial Corbon Filter): 1 unit
- Active Carbon Filter: 1 unit

Please ask for replacement filters at your dealer of purchase.

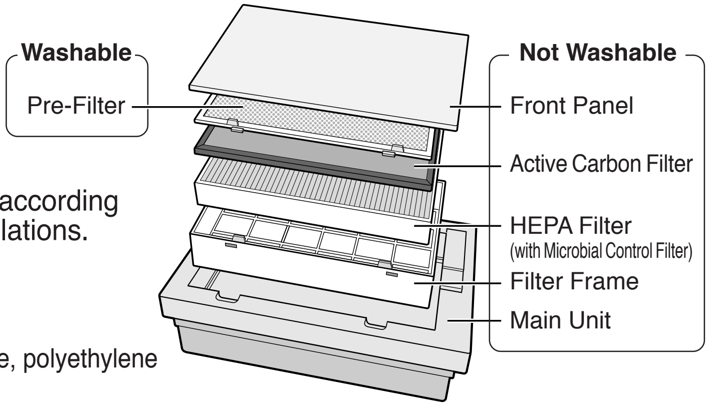

Disposal of Filters

Please dispose of replaced filters according to the local disposal laws and regulations.

HEPA Filter materials:
- Filter: Polypropylene
- Frame: Polyester
- Microbial Control Filter: Polypropylene, polyethylene

Active Carbon Filter Materials:
- Deodorizer: Activated charcoal
- Frame: Paper
- Net: Polypropylene 60% Polyester 40%

MAIN UNIT

To prevent dirt or stains on the main unit, clean as often as necessary. If stains are allowed to remain, they may become hard to clean.

Wipe with a dry, soft cloth
For stubborn stains or dirt, use a soft cloth dampened with warm water.

Do not use volatile fluids
Benzene, paint thinner, polishing powder, etc., may damage the surface.

Do not use detergents
Detergent ingredients may damage the unit.

Keep the unit away from water

ODOUR SENSOR

Remove dust from the surfaces of the sensor openings with a vacuum cleaner.

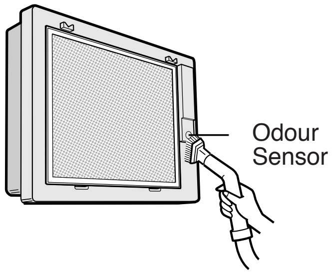

PRE-FILTER

Remove the Filter Frame, Clean the top surface of the Pre-Filter lightly with a vacuum cleaner.
If it is contaminated heavily, remove it from the Filter Frame to wash it.

NOTE

- In case of washing, use a soft brush etc. and cold/warm water.
- Metal brushes or scrub brushes may cause damage.
- After washing, leave it in the shade until it gets dried. Then place it back to the Filter Frame.

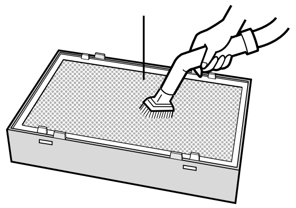

SPECIFICATIONS

	Model	FU-28H-A	
	Power Supply	220V 50Hz	
Fan Speed Operation	Fan Speed Adjustment	MAX	SILENT
	Rated Power	29 W	3.1 W
	Air Flow Volume	168m^3/hour	30m^3/hour
	Applicable Floor Surface	~21 m^2	
	Cord Length	2.5m	
	Dimensions	482mm(W)x142mm(D)x337mm(H)	
		482mm(W)x228mm(D)x373mm(H) (Stand installation)	
	Weight	6.2kg	

* The applicable floor surface area is the surface area for when operating the unit in MAX fan level. Applicable floor surface area indicates the space where a certain amount of dust pollution can be removed in 30 minutes.

About the reduction of standby power
In order to operate the electrical circuits while the power plug is inserted in the wall outlet, this product consumes about 1.0W of standby power.
For the conservation of energy, remove the power plug when not using the unit.

TROUBLESHOOTING

Before calling for repair, please review the list below, since the problem may not be a unit malfunction.

SYMPTOM	REMEDY (not a malfunction)
The Remote Control does not work	• Have the batteries been depleted? • Are the batteries inserted correctly? • Is a fluorescent lighting in the room flickering due to service life? (Refer to E-5)
Odours and smoke are not removed	• Replace the filters if they appear to be heavily soiled. (Refer to E-14)
A ticking sound is heard from the unit	• Ticking sound is emitted when the unit is generating ions. This is normal and not a malfunction.
The discharged air has an aroma or odour.	• Check to see if the filters are heavily soiled. Replace filters (Refer to E-14) • Plasmacluster Air Purifiers emit small traces of ozone which may produce an odour. These ozone emissions are below safety levels set by the IEC 60335-2-65.
The unit does not operate when cigarette smoke is in the air.	• Is the unit installed in a location that is difficult for the sensor to detect cigarette smoke? • Are the odour sensor openings blocked or clogged? (In this case, clean the openings.) (Refer to E-15)

ERROR DISPLAY

LAMP INDICATION	REMEDY
The "Silent" Fan Speed Indicator Light blinks.	Fan motor disconnected or abnormal. Operation stops. • Pressing the ON/OFF button will reset the error display, but if error occurs again, contact the shop where you purchased the unit.

OPTIONAL STAND

Model : FZ-FC1TS

In case you prefer free standing installation, optional stand FZ-FC1TS is available.

Please ask for optional stand at your dealer .

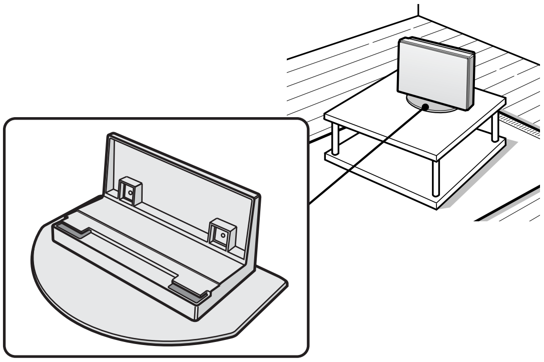

中文

聲寶空氣清新機操作原理

空氣清新機經進氣口吸入室內空氣，使其通過機內的活性碳過濾網（除臭過濾網）和HEPA過濾網（集塵過濾網），然後從排氣口排出。空氣清新機通過其內部風扇的操作不斷重複此過程。當空氣通過時，HEPA過濾網能夠除去灰塵粒子。當異味成分多次通過活性碳過濾網時，便逐步被吸收。（異味成分也被HEPA過濾網吸收。）

有些已被過濾網吸附的異味分子可能會離開過濾網，然後隨出風口吹出。根據不同的使用環境，這些異味可能在比預期更短的時間內變得強烈。在這種情況下，請選購過濾網更換配件FZ-28SEF。

注意

本空氣清新機用於去除空氣中懸浮的灰塵和異味，而不能去除有害氣體（如：香煙煙霧中含有的一氧化碳）。如果異味的源頭依然存在，異味將不能徹底被去除。（如：來自建築材料和寵物身上的異味）。

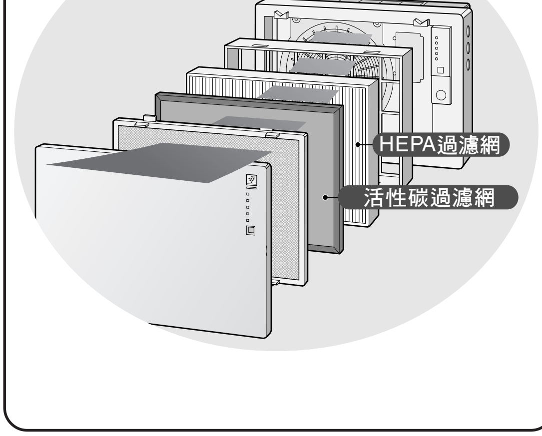

目錄

重要安全事項 C-2
- 警告 C-2
- 操作本機的注意事項 C-2
- 遙控器限制 C-3
- 產品掛牆安裝時注意事項 C-3
- 過濾網指南 C-3

部件名稱 C-4
- 主機部件 C-4
- 背部 C-4
- 附件 C-4

準備工作 C-5
- 安裝遙控器電池 C-5
- 使用遙控器 C-5

安裝 C-6

安裝過濾網 C-10

操作 C-12
- 主機操作 C-12
- 遙控器操作 C-13

保養和清潔 C-14
- 過濾網更換指南 C-14
- 主機 C-15
- 異味感應器 C-15
- 前過濾網 C-15

規格 C-15

維修前的檢查事項 C-16

多謝您購買聲寶FU-28H-A空氣清新機。請仔細閱讀此說明書，以了解正確的使用信息。在使用本產品之前，請務必閱讀“重要安全事項”這一節。閱讀後請妥善保管此說明書，以便日後翻閱。

重要安全事項

當使用電器時，必須遵守基本的安全預防措施，包括以下各方面：

警告 — 為了減少電擊、火災或受傷等危險：

- 在使用空氣清新機之前請閱讀所有注意事項。
- 只能使用220V的插座。
- **如果電線或插頭已經損壞，或者壁裝電源插座已經鬆脫，請勿使用空氣清新機。**
- 定期清除電源插頭上的灰塵。
- **請勿將手指或異物插入進氣口或排氣口。**

  當拔掉電源插頭時，必須緊握插頭而不要拉扯電線。

  否則可能導致電擊和/或因短路引起火災。
- **請勿在靠近氣體設備或壁爐的地方使用空氣清新機。**
- **當清潔本機或不使用本機時，請從壁裝電源插座上拔掉插頭。**

  否則可能導致因絕緣不良引起的電擊和/或因短路引起的火災。
- **如果電源線損壞，必須由生產商或其代理、聲寶公司的特約維修中心或具有相同資格的人員來更換，以免發生危險。**
- 當使用噴霧殺蟲劑時請勿使用本機， 或若房間內有油渣、焚香時的煙、點燃香煙的火苗、空氣中的化學氣體或濕氣重時也不要使用本機。
- 清潔空氣清新機時請加以小心。腐蝕性強的清潔劑會損壞本機的表面。
- 只有聲寶特約維修人員才能維修本空氣清新機。當需要調整、修理或有任何問題時， 請聯絡就近的維修人員。
- 電池處理前必須從遙控器中取出， 並且必須安全處理。

操作本機的注意事項

- 請勿堵塞進氣口和排氣口。
- 不要靠近或在熱源體上（如可能接觸到蒸汽的場所）使用本機。
- **移動本機時，請緊握主機。**

  移動時若握前面板， 會導致前面板脫落， 從而摔落主機， 造成身體損傷。
- **請勿在沒有過濾網的情況下操作本機。**
- **請勿清洗活性碳過濾網和HEPA過濾網。**

  這不僅不能增強過濾網的性能， 反而可能會導致電擊或故障。
- **只能使用一塊軟布清潔表面。**

  否則本機表面可能會損壞或破裂。

  此外， 還可能導致感應器故障。

遙控器限制

請勿在下列情況下使用遙控器:

- **任何有變頻器的照明設備或電子燈光設備的地方，遙控器可能會失靈。**
  在這種情況下，使本機遠離這些燈光設備或改變其方向。
- **陽光或螢光直接照射的地方，**
  本機可能接收不到來自遙控器的信號。

產品掛牆安裝時注意事項

- **請勿安裝在感應器直接向著風口的地方。**
  否則可能會影響本機正常操作。
- **請勿安裝在窗簾等可能會接觸到進氣口或排氣口的地方。**
  否則該物會被污染或導致本機故障。
- **請勿安裝在由於溫度劇烈變化而導致本機直接暴露於冷凝環境的地方。**
- **安裝位置必須穩固，且通風良好。**
- **請將本機安裝在牆壁、木柱、橫木等平坦且具足夠支撐力的地方。**
- **請勿將本機安裝在薄牆壁或石膏板上。若將其安裝在支撐性強度不大的牆上時，則可能會導致摔落情況發生。**
- **如欲將本產品安裝在厚度小於10 毫米的木牆上時，請在安裝前與您的經銷商聯絡以確認牆壁的強度。**
- **移動本機時，請緊握主機。**
  移動時若握著前面板，可能會導致前面板脫落，從而摔落主機，造成身體損傷。
- **請勿安裝在會產生黑煙的地方（如廚房等）。**
  否則可能會導致本機表面破裂或感應器故障。

過濾網指南

- 遵照說明書的指示，了解正確保養和清潔過濾網的方法。

部件名稱

主機部件

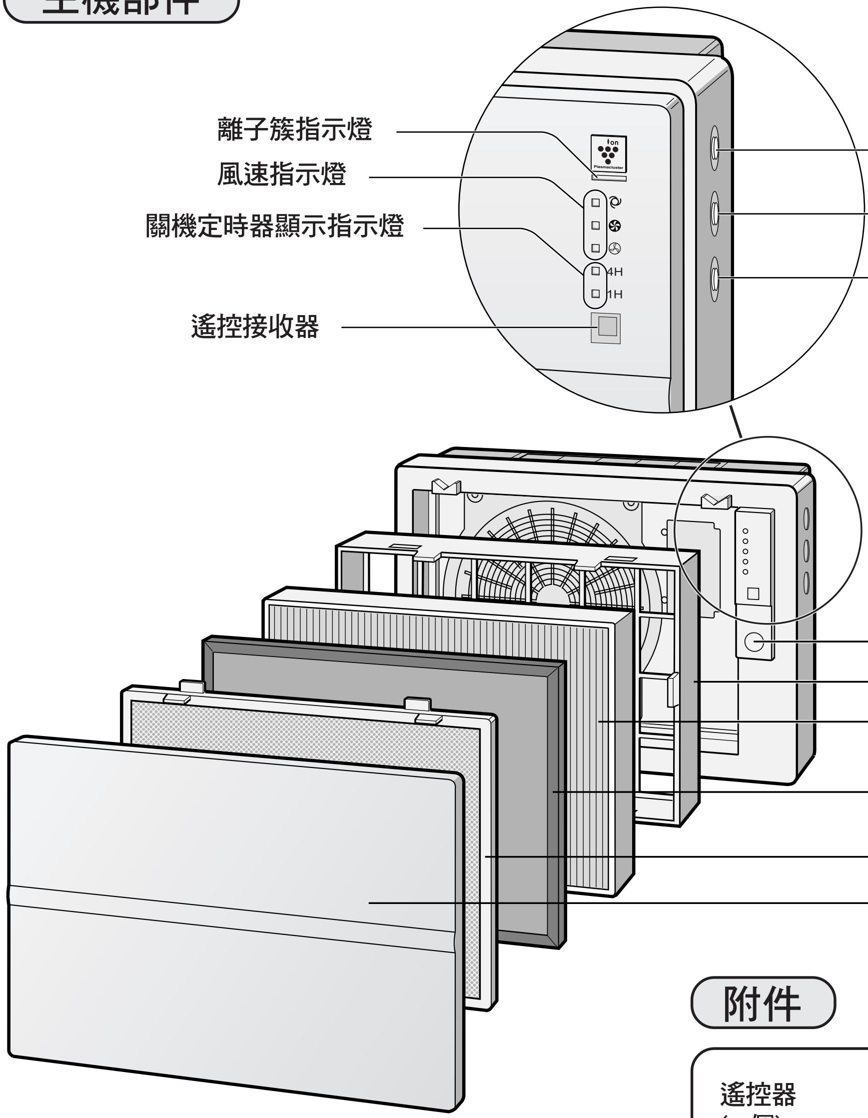

背部

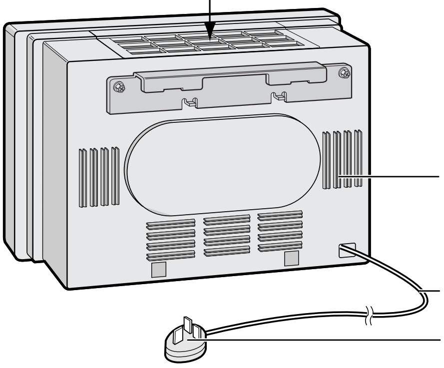

附件

遙控器
(1 個)

電池
(2枚AA電池)

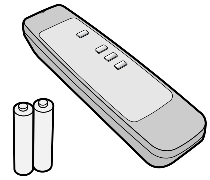

使用說明書

牆壁安裝配套

- 掛牆托架

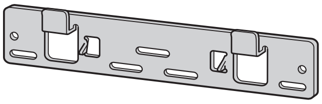

- 木螺絲釘（4枚）
- 魚尾栓（4枚）

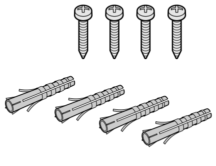

準備工作

安裝遙控器電池

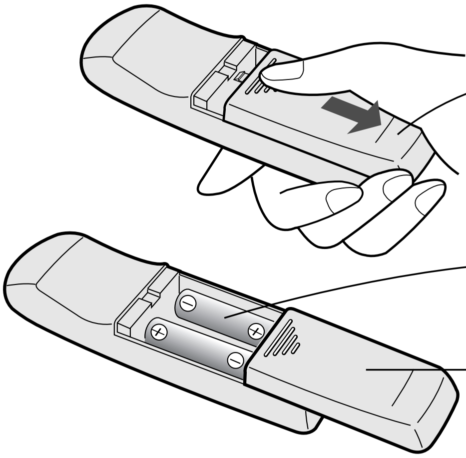

1 打開後蓋
按下並滑動，以打開後蓋。

2 裝入電池
依照圖示的正 ⊕ 負 ⊖ 極標記裝入電池。

3 推回後蓋

關於電池

- 電池大約可用一年。
- 遙控器無效時，請更換電池。
- 不正確地使用電池可能會導致電池漏液和/或損壞。
  操作時請注意以下事項：
  - 更換電池時，請同時更換兩枚相同類型的新電池。（使用2枚AA錳性電池。）
  - 當長時間不使用本機或遙控器時，請取出電池。這樣可防止遙控器由於電池漏液而損壞。
  - 隨機附送的電池必須為初次使用，並且電量可能在1年內耗盡。

中文

使用遙控器

- 對著主機接收器操作遙控器（由前面計）。
- 信號覆蓋範圍約為7米。
- 確認沒有物體阻擋遙控器的信號。
- 當接收到信號時，主機會發出“嗶”聲。

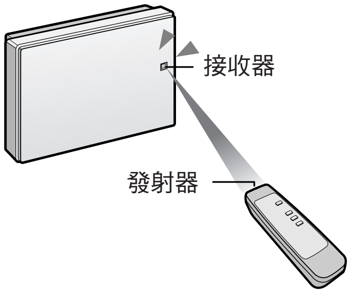

注意

- 避免掉下或損壞遙控器，或是在過度潮濕、陽光直接照射或靠近熱源的地方使用遙控器。

正確安裝

去除室內異味

將本裝置安裝在牆壁上高處的位置上最為有效。

去除室內灰塵

花粉、室內灰塵等尺寸相對較大的灰塵粒子沉積在室內空氣較低層的位置上。

安裝位置應選擇在室內通風良好的地方

這樣可提高本裝置的淨化效能，有助把離子簇分佈在室內。

直立式安裝

如果您喜歡直立式安裝，請採用另購支架FZ-FC1TS。

使用條件

請在下列條件下使用本裝置。

建議在0-35 °C的室內溫度範圍內使用本裝置。請勿安裝在由於溫度劇烈變化而導致本機直接暴露於冷凝環境的地方。

1 確定安裝位置

按下圖所示在支架周圍留出空間位置。支架周圍若空間大小不夠，則無法安裝本裝置。

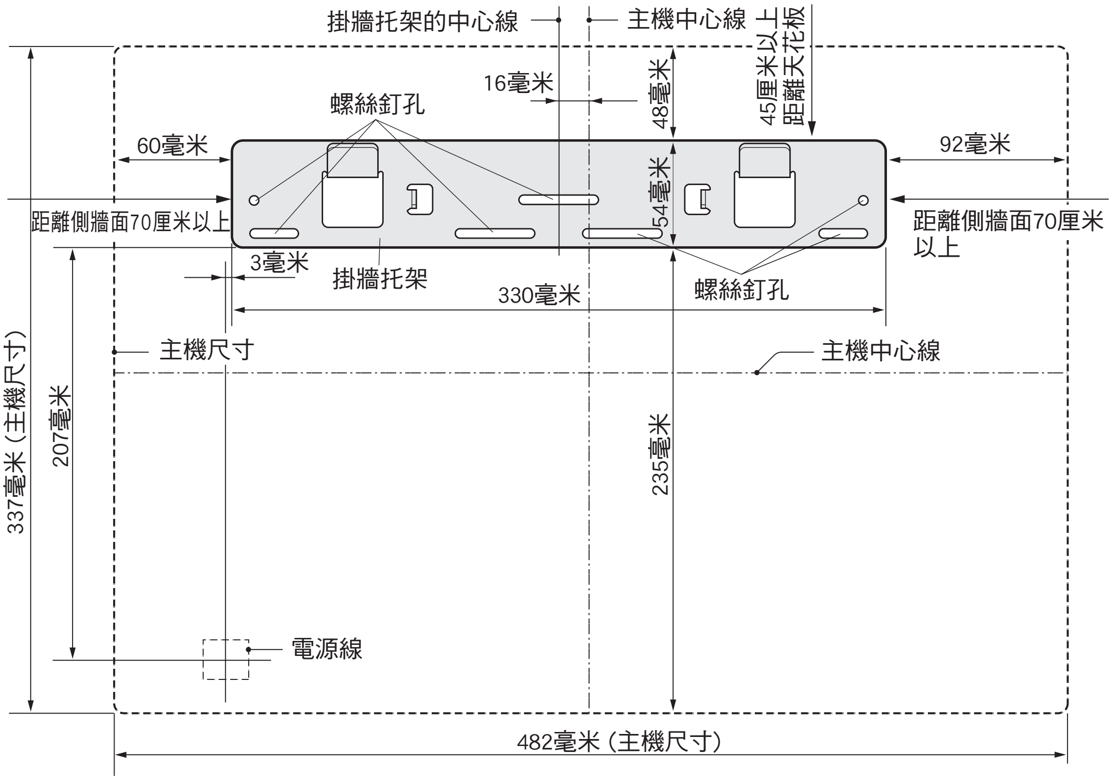

安裝注意事項

- 在固定掛牆托架之前，應確認牆壁上不存在任何妨礙安裝的障礙物。然後用隨機提供的木螺絲釘通過螺絲釘孔安裝掛牆托架。
- 在牆上、木柱、石膏板上或類似之物上安裝裝置時，他們的表面應平坦，並且具足夠的強度。
- 如果牆體強度較弱或由混凝土製成，則應由電子器材商店的專業人員進行安裝。
- 避免安裝位置靠近反用換流器燈或陽光直射的位置。

2 安裝掛牆托架

• 使用木螺絲釘等安裝支架，保持支架平衡。

● 混凝土、預制板或灰泥面上安裝時

牆上鑽孔深度至少為35毫米、直徑至少為5毫米，推入魚尾栓，並用木螺絲釘固定主機。

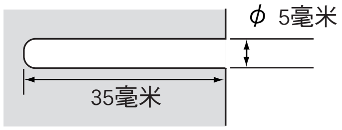

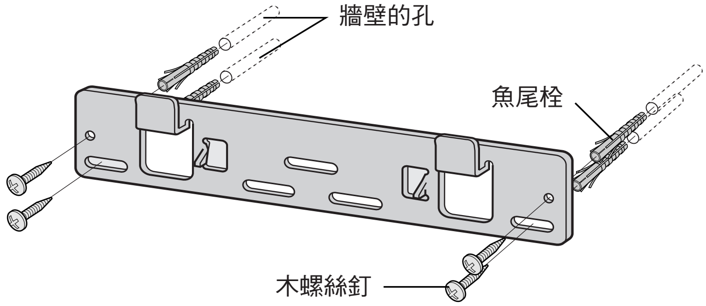

● 在木柱、過梁或其他木製表面上安裝時

安裝時使用木螺絲釘。

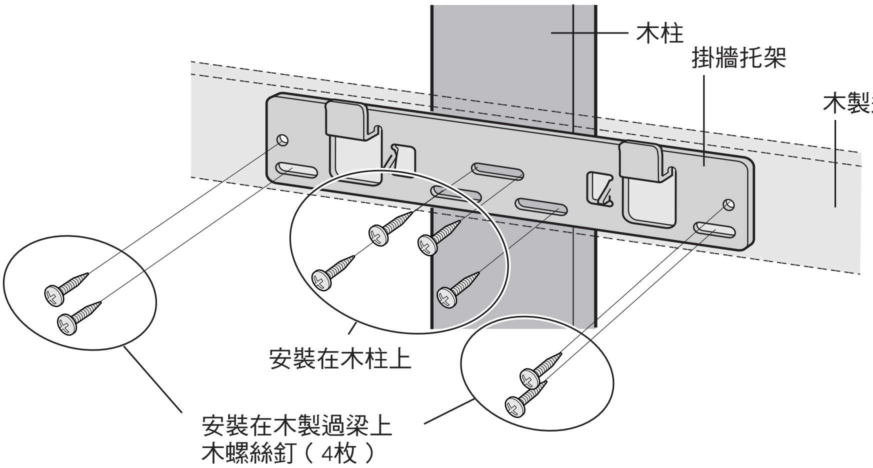

注意

• 若將本產品安裝於厚度少於10 毫米的木製牆壁上，請在安裝前與您的銷售商聯繫以確認牆壁的強度。
• 請將本機安裝在牆壁、木柱、過梁等平坦且支撐強度大的地方。
• 安裝時確保裝置向上直立，無左、右傾斜。

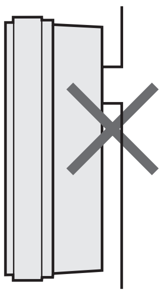

中文

安裝

開始牆壁安裝前，必定要將前面板從過濾網支架上取下。

3 將本機安裝到牆壁上。

1 **將本機面向上放置，取下前面板和過濾網支架。**

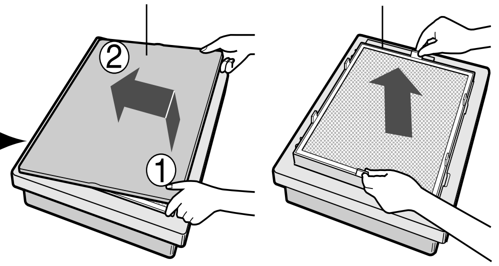

2 **調整電源線的長度。**

1 量度裝置和牆上插座間的距離（ 參見第C-6頁 ）。

2 將本機面向下放置，將電源線插入電源線定位頁片中，將電源線調整到所量度的長度。

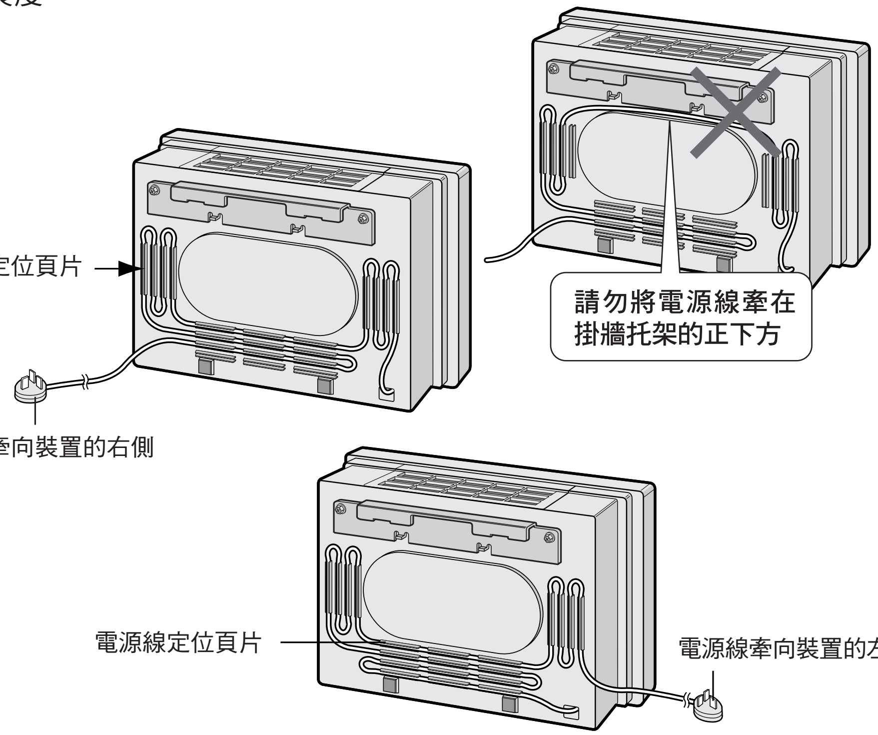

注意事項

- 為防止刮傷或損壞裝置，在將其安裝到牆壁上之前，請將其放在一塊軟布上。
- 請勿將電源線與其他線纜一起牽入，也不要扭彎電源線。
- 請勿改動電源線。
- 注意不要損壞電源線。

3 在距掛牆托架兩側上方8厘米處作一標記（膠布等）。

4 抬起本機，將其上的掛鉤孔對準標記，將裝置掛在掛牆托架上，滑動到正確位置。
定位正確後，輕輕向下移動本機，直至與支架嚙合。

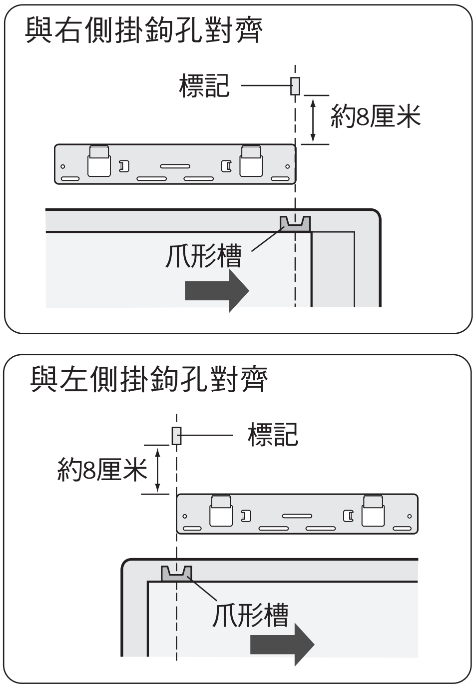

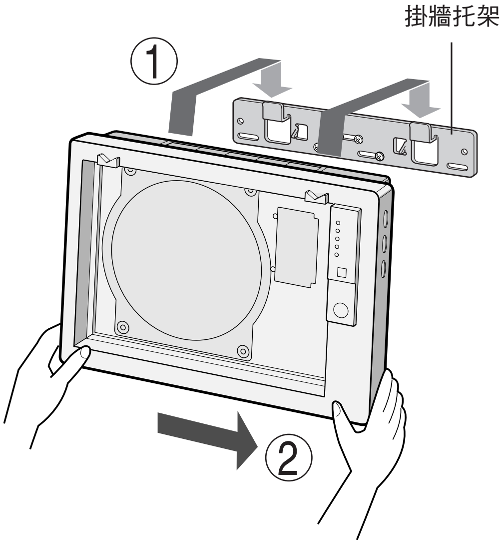

5 再次檢查安裝

請確定本機的爪鉤正確地被掛置；否則，裝置會傾側移動。此外，還可能會導致本機摔落，造成損壞。

• 確保電源線沒有被本機夾著。

6 牆壁安裝托架

如何取下本機

將電源插頭從牆壁電源插座上拔出，取下前面板和過濾網支架。用手握住裝置的下角，輕輕向上抬起，然後將其向左或向右滑動，然後向上抬離。

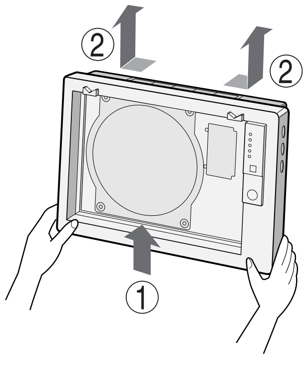

中文

安裝過濾網

確保使用本機前將過濾網從塑膠袋中取出。

1 **從過濾網支架中取出前過濾網、活性碳過濾網和HEPA過濾網。**

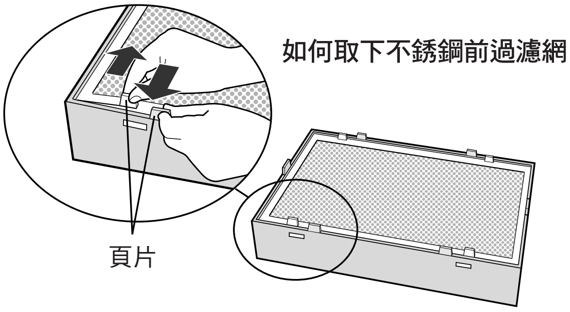

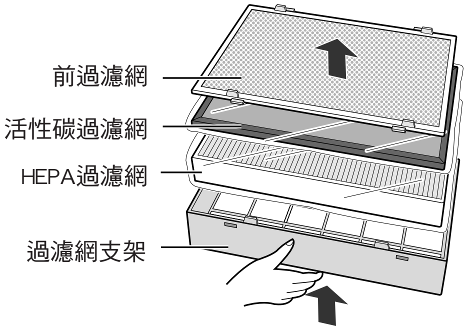

2 **從塑膠袋中取出前過濾網、活性碳過濾網和HEPA過濾網。**

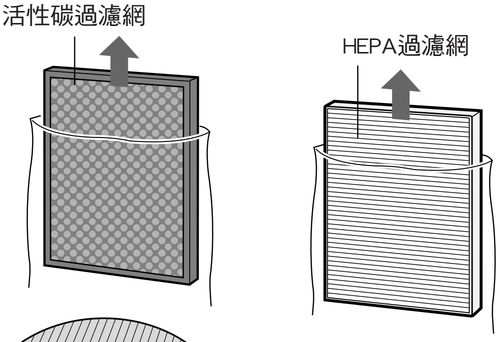

3 **將HEPA放在過濾網支架內。**

請勿將過濾網以相反方向安裝，否則將影響本機正常操作。

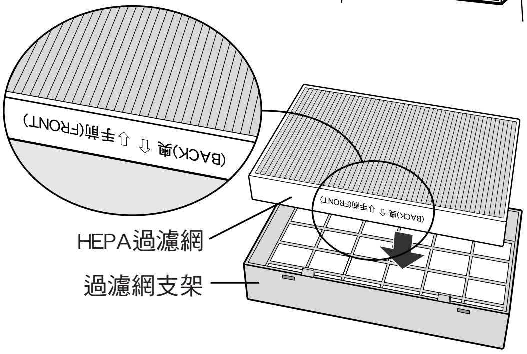

4 **將活性碳過濾網放在HEPA過濾網上面。**

活性碳過濾網無正反方向之分。

5 **下一步，將前過濾網放進過濾網支架內。**

將前過濾網上的4個頁片按入到過濾網支架上的孔中。

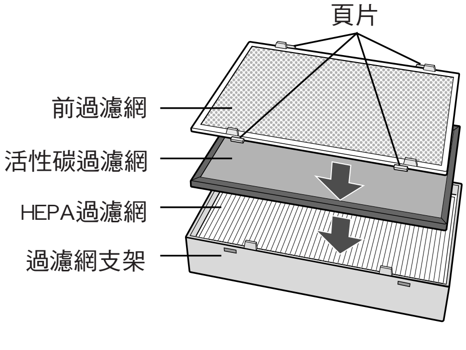

6 **將過濾網支架裝進主機。**

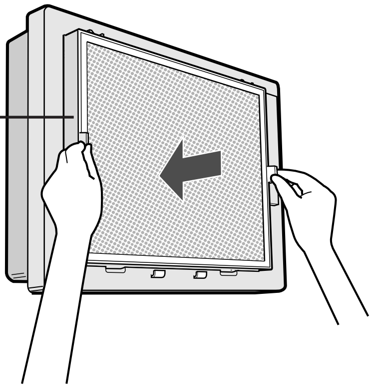

7 **在日期標籤上填寫開始使用的日期。**

該日期將作為日後過濾網更換時間的參考之用。

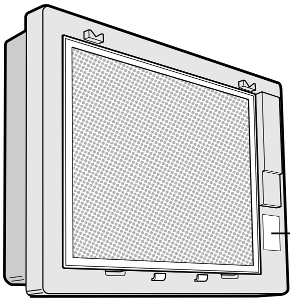

8 **將前面板裝進主機。**

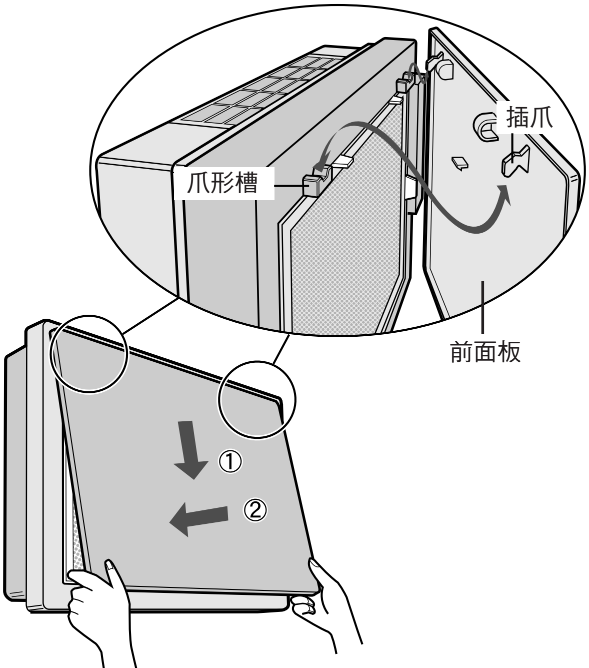

9 **將電源插座插入牆上的插座內，並使用遙控器啟動或停止操作。**

中文

操作

將插頭插入牆壁插座後的頭30分鐘內，裝置將檢測空氣狀況。

- **自動操作**
  異味感應器檢測空氣中雜質的含量，風速會根據檢測狀況自動被轉換。
- **手動操作**
  不管空氣中雜質的含量，風速可根據需要在靜音(Silent)和最大(Max)兩種模式下進行切換。

主機操作

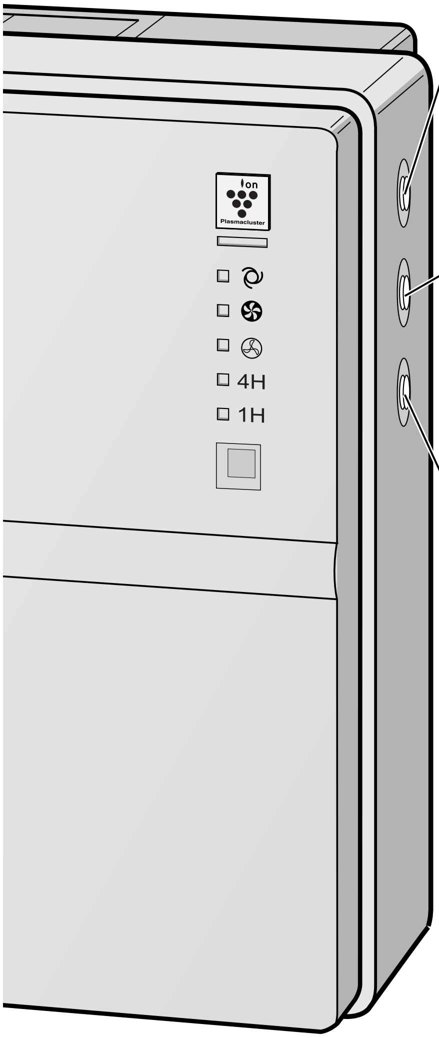

電源開/關按鈕

- 用於開始自動操作本機（短嗶聲）和停止操作本機（長嗶聲）。
- 離子簇指示燈和風速指示燈（自動）開/關。
- 除非拔掉電源線，否則主機啟動後將維持前一次的操作模式。

風扇控制按鈕

風扇速度可在靜音和最大兩種模式間進行轉換。

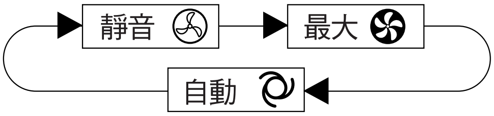

關機定時器按鈕

- 每按一次該按鈕，設定時間將按以下順序設定。
- 選擇“4小時”定時，“4小時”指示燈會點亮；如果定時設置為1小時，則指示燈轉換至“1小時”。

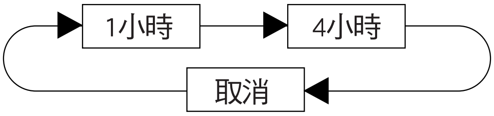

離子簇模式操作

當本產品正在操作時，本機會持續釋放數量大致相等的正、負離子群。這對於減少某些空氣中的霉菌十分有效。

遙控器操作

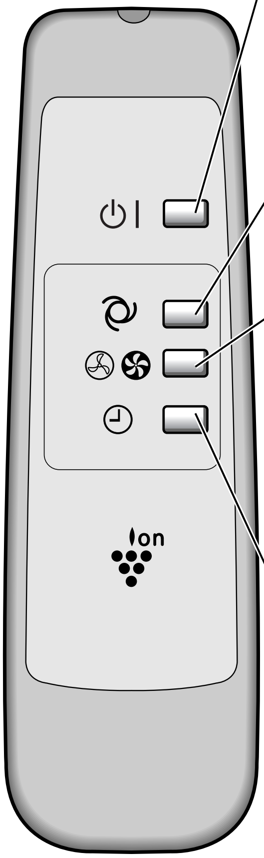

電源開/關按鈕

- 用於開始自動操作本機（短嗶聲）和停止操作本機（長嗶聲）。
- 離子簇指示燈和風速指示燈（自動）開/關。
- 除非拔掉電源線，否則主機啟動後將維持前一次的操作模式。

自動（風速）按鈕

風速將根據室內空氣的污染程度自動轉換。

手動（風速）按鈕

風速可以在靜音和最大之間轉換。

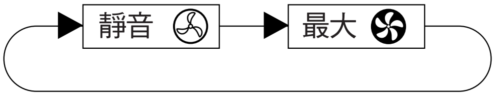

關機定時器按鈕

- 每按一次該按鈕，設定時間將按以下順序設定。
- 選擇“4 小時”定時，“4 小時”指示燈會點亮；如果定時設置為 1 小時，則指示燈轉換至“1 小時”。

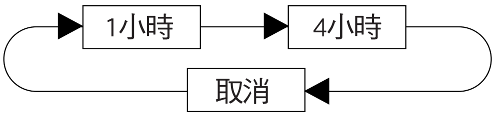

保養和清潔

為了保持空氣清新機的最佳性能，請定期清潔本機，包括感應器和過濾網。
清潔本機時，請拔掉電源線，並切記不要用濕手觸摸電源插頭。否則可能會導致電擊和／或受傷。

過濾網更換指南

根據不同的使用環境，幾個月後排氣口的異味可能會變得強烈。
如果灰塵或異味不易被去除，請更換過濾網。
（參見聲寶空氣清新機操作原理 第C-1頁）

過濾網更換時間指南

- 以下的過濾網使用壽命和更換時間是以每天吸10支煙，且集塵/除臭效能比初次使用時減少一半來計算。

• HEPA過濾網	打開後約12個月
• 活性碳過濾網	打開後約12個月

更換過濾網

1 **關於更換時過濾網的安裝指南，請參見第C-10、11頁。**

2 **在日期標籤上填寫過濾網開始使用的日期。**

更換用的過濾網

型號：FZ-28SEF
- HEPA過濾網（備有微生物控制過濾網）：1 只
- 活性碳過濾網：1 只

請向您的經銷商咨詢購買更換用的過濾網事宜。

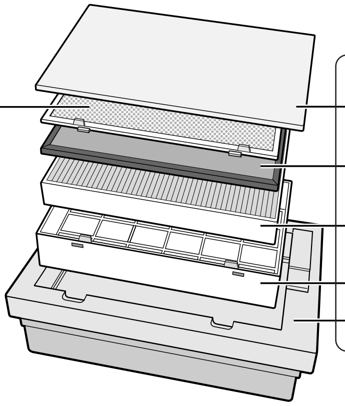

棄置過濾網

請根據當地法律規定來棄置已使用的過濾網。

HEPA過濾網材料：
- 過濾網：聚丙烯
- 支架：聚酯
- 微生物控制過濾網：聚丙烯，聚乙烯

活性碳過濾網材料：
- 除臭劑：活性碳
- 框架：聚酯
- 網：60%聚丙烯，40%聚酯

主機

為防止主機積聚灰塵和污垢，需經常清潔主機。時間長了頑固的污垢將變得難以清洗。

使用一塊柔軟的乾布擦拭

對於頑固的污漬，使用一塊溫水浸過的軟布擦拭。

請勿使用揮發性液體

苯、油漆稀釋劑以及打蠟粉等可能會損壞主機表面。

請勿使用清潔劑

清潔劑可能會損壞主機。

請勿讓本機進水

異味感應器

使用吸塵機除去感應器表面的灰塵。

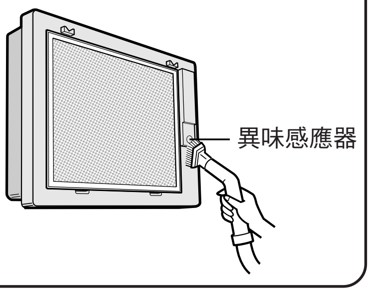

前過濾網

取下過濾網支架，用吸塵機輕輕地清潔前過濾網表面。
如果髒的很厲害，將其從過濾網支架中取出清洗。

注意

- 如要進行清洗，請使用一個軟刷以及冷／溫水。
- 金屬刷或硬刷可能會損壞過濾網。
- 清洗後將其放在陰涼處風乾。然後將其放回過濾網支架內。

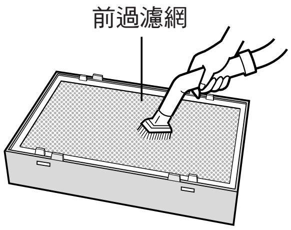

中文

規格

<table>
<tr><td colspan="2">型號</td><td colspan="2">FU-28H-A</td></tr>
<tr><td colspan="2">電源</td><td colspan="2">220V 50Hz</td></tr>
<tr><td rowspan="3">風速操作</td><td>風速調整</td><td>最大</td><td>靜音</td></tr>
<tr><td>額定功率</td><td>29瓦</td><td>3.1瓦</td></tr>
<tr><td>送風速度</td><td>168立方米/小時</td><td>30立方米/小時</td></tr>
<tr><td colspan="2">適用面積</td><td colspan="2">～21平方米</td></tr>
<tr><td colspan="2">電源線長度</td><td colspan="2">2.5米</td></tr>
<tr><td colspan="2" rowspan="2">尺寸</td><td colspan="2">482毫米(寬)x142毫米(深)x337毫米(高)</td></tr>
<tr><td colspan="2">482毫米(寬)x228毫米(深)x373毫米(高)（標準安裝）</td></tr>
<tr><td colspan="2">重量</td><td colspan="2">6.2公斤</td></tr>
</table>

* 適用面積是指以最大風速操作本機的面積計算。
適用面積表示該空間內所含的灰塵粒子可以在30分鐘內消除。

關於減少備用耗電量

當電源插頭插進插座時，本機在備用情況下所耗的電量為1.0瓦。
若需節省用電，請在不使用本機時拔掉電源插頭。

維修前的檢查事項

在要求修理之前，請檢查以下症狀，因為有些問題可能並不是由於本機故障而引起的。

症狀	補救措施（並非故障）
遙控器無法使用	• 電池是否已耗盡？ • 電池安裝是否正確？ • 室內的螢光燈是否已接近使用壽命而閃爍？（參見第C-5頁）
不能去除異味和煙霧	• 如果過濾網已很髒，請更換（參見第C-14頁）
主機發出喀嚓/滴答聲	• 當本機釋放離子時會發出滴答聲。此屬正常情況，而非故障。
排出的空氣有異味	• 檢查過濾網是否已經很髒。更換過濾網（參見C-14頁） • 離子簇空氣清新機釋放少量臭氧，這可能會產生異味。臭氧量釋放量低於IEC 60335-2-65規定的安全標準。
即使空氣中有煙霧時，主機也不操作	• 本機是否安裝在感應器難以感測到煙霧的地方？ • 異味感應器是否被堵塞？ （如果是，請清潔開口處。）（參見第C-15頁）

錯誤顯示

指示燈	補救措施
“靜音”風速指示燈閃爍	風扇馬達切斷或異常。 操作停止。 • 按開/關按鈕將重設錯誤顯示，但是若再次出現錯誤，請聯絡您購買本機的商店。

另購支架

型號：FZ-FC1TS

可提供選裝支架FZ-FC1TS，用於把本機裝設在地面或桌上。
請與您購買產品的銷售商聯繫購買支架。

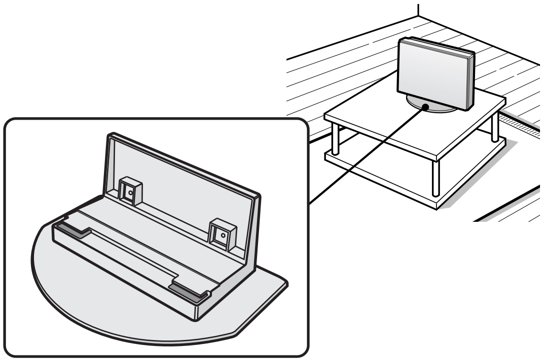

SHARP

SHARP CORPORATION

Printed in Japan
TINS-A140KKRZ 04KK ①